UNSeries

Dimmension [mm]

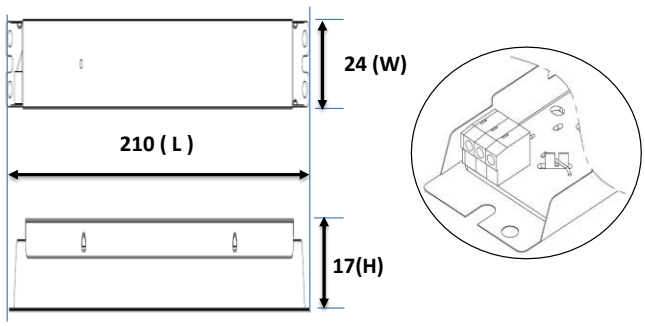

* 취부Hole 간격 : 200

결선방법 : 입출력 Jack Type

DESCRIPTION		UNPF	UNPR
Circuit Type		Primary Side Regulation Type	Primary Side Regulation Type
Feature		Flicker Free	Standard
Input	Voltage (입력전압)	198 ~ 242 VAC	
	Frequency (주파수)	60Hz ± 3Hz	
	Power Factor (역률)	λ > 0.9	
	Efficiency (효율)	85%	
Output	DC Voltage (출력전압)	24Vdc ~ 48Vdc	
	Rated Current (출력전류)	Min 177mA ~ Max 1420mA	Min 177mA ~ Max 1420mA
	Rated Power (출력전력)	Min 8.5W ~ Max 34W	Min 8.5W ~ Max 34W
	Output Method (출력방식)	Constant Current Type	
Protection	Over Load (과부하)	Protection Type : Shut Down operation Voltage, Restart	
	Over Voltage (과전압)	Protection Type : Shut Down operation Voltage, Restart	
Environment	Operating Temperature (사용온도)	-20℃ ~ 50℃	
	Storage Temp & Humidity (보관조건)	-20℃ ~ 70℃ / 10 ~ 90%RH	
Safety & EMI	Safety Standards	KS C 7655, 10-IS 0256	
	EMI	Compliance to KSC IEC 61000, Class B	

* 상세사항은 당사 영업부에 문의 바랍니다.